WIRING DIAGRAM - JGD-48R

115V AC

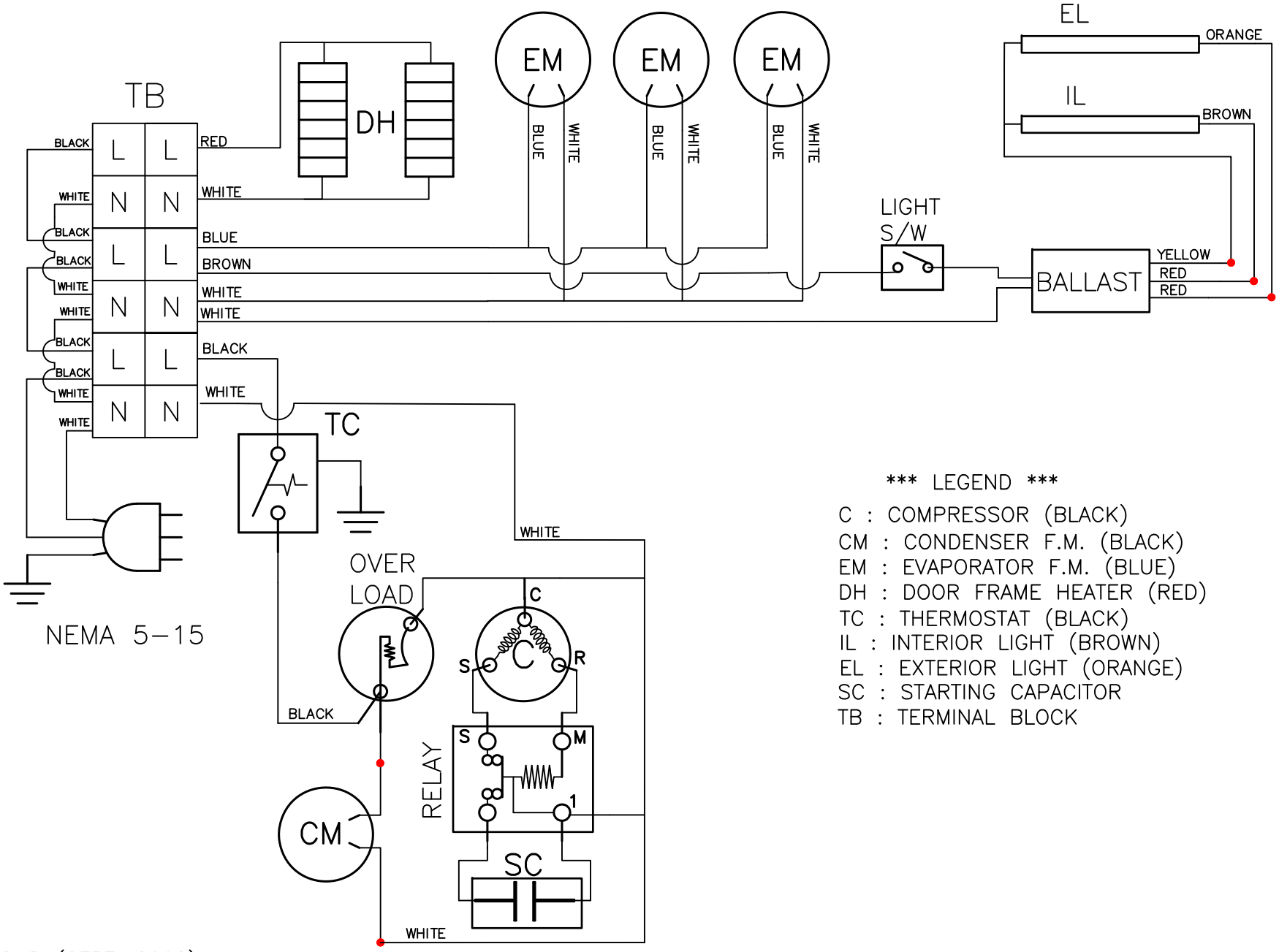

*** LEGEND ***

C : COMPRESSOR (BLACK)
CM : CONDENSER F.M. (BLACK)
EM : EVAPORATOR F.M. (BLUE)
DH : DOOR FRAME HEATER (RED)
TC : THERMOSTAT (BLACK)
IL : INTERIOR LIGHT (BROWN)
EL : EXTERIOR LIGHT (ORANGE)
SC : STARTING CAPACITOR
TB : TERMINAL BLOCK

CCWD (SEPT, 2008)