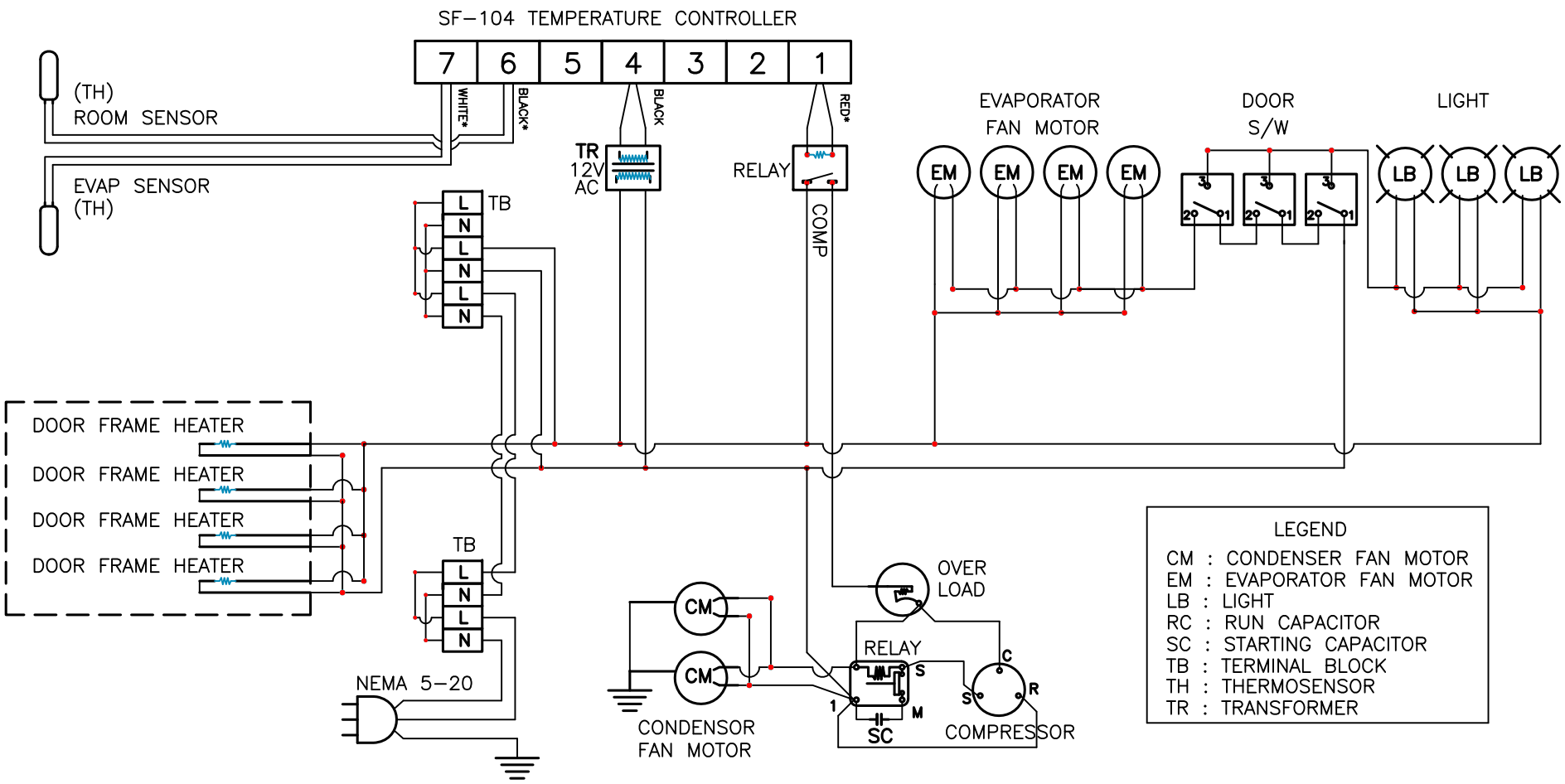

WIRING DIAGRAM - JFD-72R

115V AC

Asterisk (*) denotes sheathing color, not individual wire color.

DIAGRAM (JUL, 2008)